Code : **96C 50-- F38D-4-F**

Bellows Suction Cup 2.5 folds
Series 96C, Ø 50 mm

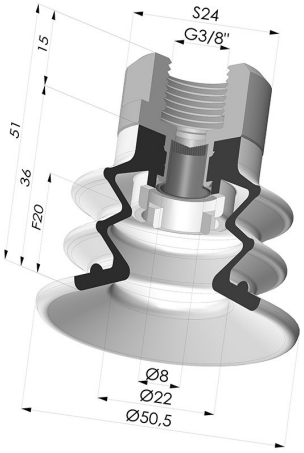

TECHNICAL INFORMATION

Range :	Suction cup
Category :	With bellows
Series :	96C
Height (in mm) :	51
Shape :	2.5 Bellows
Contact lip diameter :	50 mm
inner barrel diameter :	Male G3/8"
Number of bellows :	2.5 Bellows
Horizontal force :	78.5 N
Vertical force :	39.5 N
Arrow :	20 mm

Variants:

Variant reference:
96C 50PU F38D-4-F

- Color: Green / Yellow
- Matter: Polyurethane
- Shore Hardness: SH60 / SH30

Related products:

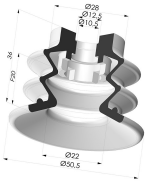

Bellows Suction Cup 2.5 folds Series 96C, Ø 50 mm

Product reference: 96C 50-- A

Flexible White Filter Series FIBS Ø 36 mm

Product reference: FIBS 96 50

Separable Female Fitting 3/8G - with Filter

Product reference: 9GF38-4-F

E-mail: info@novacom-grp.com
Z.A. de Sars et Rosières - 30, rue de l'épau - 59230 ROSULT - France
Phone. : +33 (0)3 27 30 53 53
VAT Number : FR57 381 120 484