Code : **8SB 40-- M14**
Bellows Suction Cup 1.5 folds
Series 8SB, Ø 40 mm with Fitting

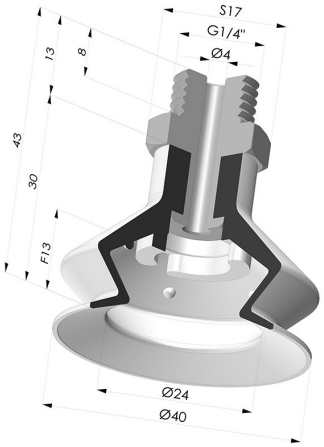

TECHNICAL INFORMATION

Range :	Suction cup
Category :	With bellows
Series :	8SB
Height (in mm) :	43
Shape :	1.5 Bellows
Contact lip diameter :	40 mm
inner barrel diameter :	Male G1/4"
Number of bellows :	1.5 Bellows
Horizontal force :	56 N
Vertical force :	28 N
Arrow :	13 mm

Variants:

Variant reference:
8SB 40SLT M14
- Color: Translucent
- CE food certified
- Matter: Silicone
- Shore Hardness: SH60

Variant reference:
8SB 40TPUB M14
- Color: Blue
- Matter: Thermoplastic
- Shore Hardness: SH70

Variant reference:
8SB 40NI M14
- Color: Black
- Matter: Nitrile
- Shore Hardness: SH50

Material guide:

	Material	Code	Temperature resistance (°C)	Flexibility	Abrasion resistance	UV/Weather resistance	Oil resistance	Food compatibility	Migration test
	Silicone Translucent (Shore SH60)	SL T	-60/+250	✓✓✓	✓	✓✓✓	✓	FDA **	✗
	Thermoplastic Blue (Shore SH70)	TPUB	-20/+80	✓	✓✓✓	✓	✓✓	✗	✗
	Nitrile Black (Shore SH50)	NI	-10/+80	✓	✓	✗	✓✓	✗	✗

Requests for FDA and/or EC certificates must be made AT THE TIME OF ORDER. Any later request will incur additional charges. To meet the expectations of our industrial customers, NOVACOM offers the widest range of elastomer and thermoplastic materials. We can also develop new materials based on precise specifications, in order to solve specific applications for our customers.

✓✓✓ Excellent | ✓✓ Good | ✓ Low | ✗ Poor | ✗✗ Not recommended
*FDA and/or EC certificate may be requested for various references at the time of order; please contact us.
** Food contact certification: (EC) 1935/2004 - (FDA) 21 CFR 177.2600
*** Food contact certification: (EC) 10/2011 - (FDA) 21 CFR

E-mail: info@novacom-grp.com
Z.A. de Sars et Rosières - 30, rue de l'épau - 59230 ROSULT - France
Phone. : +33 (0)3 27 30 53 53
VAT Number : FR57 381 120 484